EGSTON
A Pulse Electronics Company

Data sheet

68587-TSC01_01
LEADFREE

Project No.:	**68587-01**	**Customer:**	**infineon**
Reserved MNo.:	**003730461**	**Customer drawing no.:**	**N/A**
Product type:	**EQ36 PFC**	**UL Electrical insulation system:**	**N/A**

1. Bill of material:

1.1 Core:	Corehalf; EQ36/26/17.4;High flux; 060u
1.2 Wire:	Coil;7x0.3mm;60Ts
1.3 Base plate:	Plate;32x32x1.6mm;FR4
1.4 Glue:	ES5691
1.5 Solder:	Pure Sn
1.6 Varnish:	BC-359
1.7 Nomex:	0.13mm,Nomex410
1.8 Tape:	0.06x20mm

Circuits:

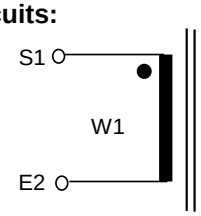

● ...electrical start
S ...mechanical start
E…mechanical end

2. Mechanical Characteristics:

Unit: mm

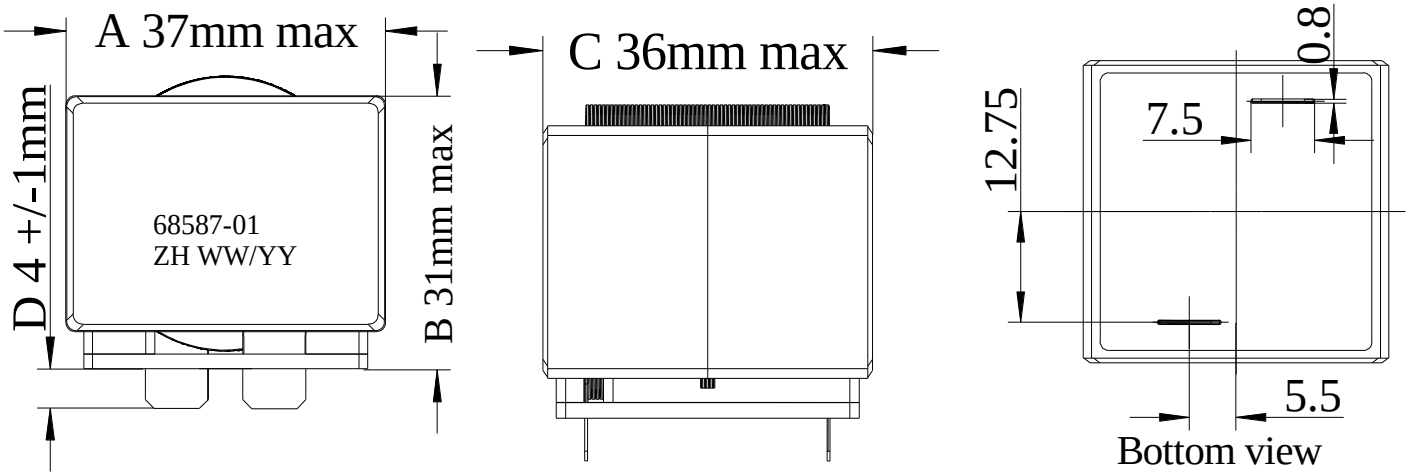

3. Electrical charateristics:

L(1-2):	518µH±15% @100kHz, 100mV @ Room Temperature (100% test)
Hi-pot:	W1 to core 500VDC 3mA@ 2 seconds; at Room Temperature (100% test)

4. Changes:

5.Remark: "0.13mm Nomex isolation foil on the center of the EQ36 core before assembly the coil"

Customer approval:

Prepared by:	ZHG	Approved by :	Jason FAN
Date:	2019/7/15	Date:	

Digitally signed by Jason FAN
DN: CN=Jason FAN, OU=E.AU, O=EGSTON, E=jason.fan@egston.com
Reason: I am approving this document
Location:
Date: 2019/07/19 16:53:27 +08'00'